where inspiration flows
taps | showering | accessories

technical sheet
product code: OMI-100M/CC-C/P

technical drawing:

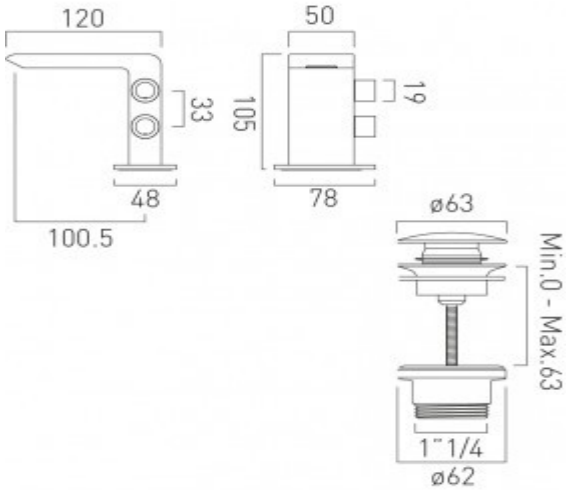

description: mini mono basin mixer
deck mounted
smooth bodied
with universal basin waste
water flow aerator
1/4 turn ceramic disk valves
2 x F-401-RTC
2 x 1/2" x 400mm flexipipe connections
deck mount drill hole diameter 35mm

finishes: chrome

Eco recommended flow regulator product code: fitted as standard

guarantee: 12 year guarantee

minimum operating pressure: 1.0 bar MP

flow rate at 3.0 bar flow pressure: 4 l/min

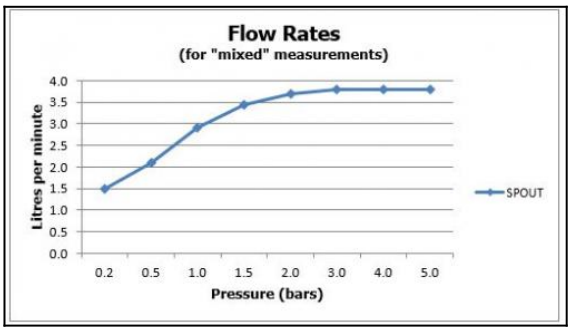

'mixed measurements' refers to equal hot and cold water supply
flow rate for unregulated flow unless flow regulator fitted as standard

VADO wedmore road cheddar somerset england bs27 3eb
tel 01934 744466 fax 01934 744345 sales@vado-uk.com www.vado-uk.com