ASC-147A-C/P, CHE-147A-C/P, INS-147A-C/P, ION-147A-C/P, LIF-147A-C/P, MAG-147A-C/P, MAT-147A-C/P, NOT-147A-C/P, ORI-147A-C/P, PHA-147A-C/P, PHO-147A-C/P, SEN-147A-C/P, SOH-147A-C/P, SYN-147A-C/P, TE-147A-C/P, ZOO-147A-C/P

VADO

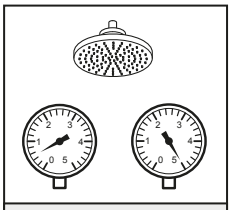

Min - 0.5 Bar Max - 5 Bar

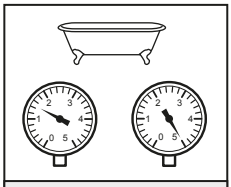

Min - 1.5 Bar Max - 5 Bar

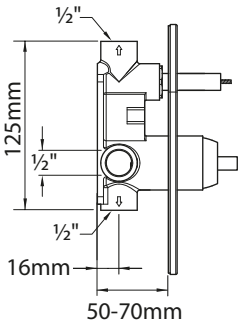

1

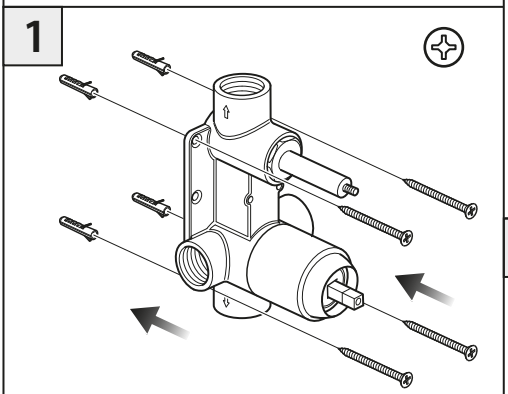

2

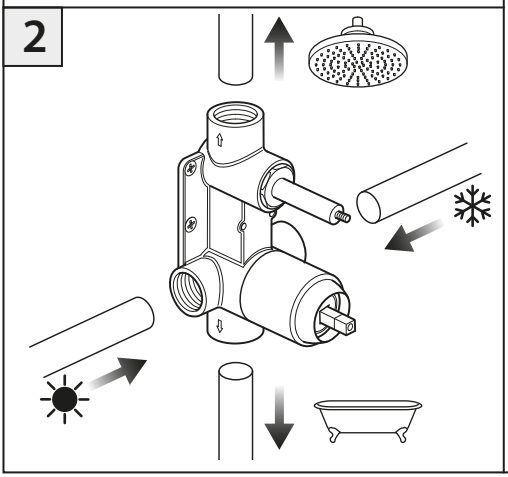

3

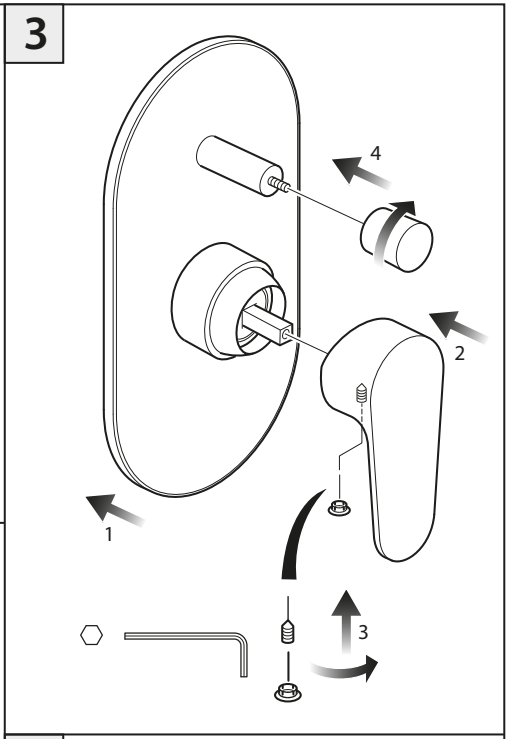
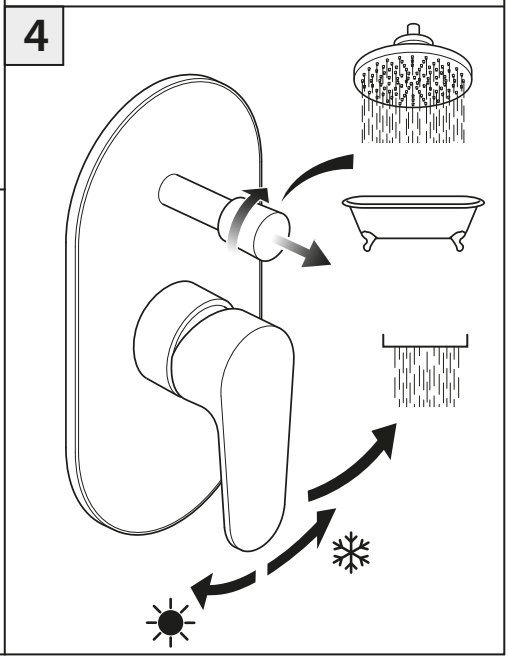
4